SmartiQo®

Smart lock manual

SmartiQo

Configuration list and installation drawing

Item No.	Picture	Accessories	Quantity
1		Mortise 40x388MM	1pcs
2		Door buckle plate	1pcs
3		Door buckle box	1pcs
4	IC	IC card	2pcs
5		suker	1pcs
6		Short screw	2pcs
7		Usb charging cable	1pcs
8		screw	4pcs
9		Installation stud	4pcs
10		Gasket	2pcs
11		Small spring	1pcs

Item No.	Picture	Accessories	Quantity	
12		Square pole 145mm	1pcs	Door thickness: 40M-140M
13		Square pole 125mm	1pcs	Anti-lock key installation special
14		Key	2pcs	Screw for lock cylinder
15		Lock cylinder	1pcs	
16		long screw	1pcs	

Cutting template

1. Please refer template carefully to drill hole

2. If there is a deviation in the hole, the lock body and panel assembly are put into the door and the hole is corrected until appropriate.

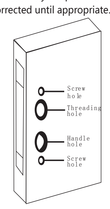

Install lock body & Strike Box

Mounting the lock body to the door with screws requires that the lock body be installed and kept parallel to the door panel

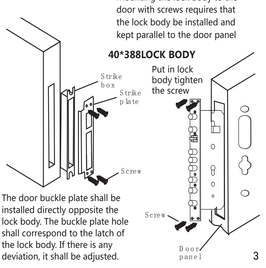

The door buckle plate shall be installed directly opposite the lock body. The buckle plate hole shall correspond to the latch of the lock body. If there is any deviation, it shall be adjusted.

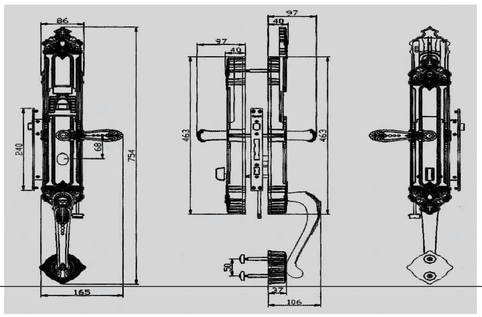

Dual latch install diagram

Remind

Product performance
Ideal for home, office indoor lock
Suitable to 38-50mm thickness door
Determine the door direction
Stand outside of the door
Adjust the direction of the handle and latch bolt accordingly to the opening direction when installing the door.
Change lock body direction left and right
When installing the lock body, the latch bolt is on the upper side, the dead bolt under the latch bolt, and the inclined surface of the latch bolt is facing the opening direction.
1.Push the Detent up
2.PUsh the latch support column forword
It will push out the lotch bolt
3.rotate the lotch bolt180 degrees

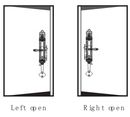

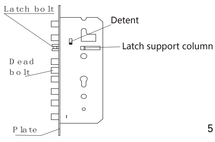

Description

Door opening methods: fingerprints, passwords, IC cards, mechanical keys, WeChat applets and other door opening methods, bringing you a different door opening experience (the specific configuration is subject to the actual product)

Fingerprint: Adopt advanced semiconductor sensor, 360-degree recognition angle, wide fingerprint collection area, high resolution, effectively prevent false fingerprints

Password: Using the fashionable and advanced touch screen key technology, 12 irrelevant passwords can be added before and after the correct password, effectively preventing the embarrassment of entering passwords when many people are traveling together;

Double verification mode: you can set fingerprints, passwords and cards in pairs to verify and unlock the door. After setting, only two users can verify at the same time to open the door, which is suitable for special occasions;

User management: The administrator has the highest authority (ordinary users can only open and close the door) and can edit and set the lock. The number of administrators is 9 (for fingerprints, passwords, cards), and the total capacity is 300;

Alarm function: This machine has anti warp alarm, low pressure alarm, trial and error alarm;

Backup power supply: When the battery is exhausted, use a 5V mobile power supply to provide emergency power to the door lock;

2-2: Enter the management system, press【*】+【#】keys, enter the engineering password 123456 administrator password, press【#】key to confirm the verification is successful, enter the main menu, and set according to requirements.

Note: When adding the first new administrator password, the original engineering password 123456 will be deleted automatically.

Note: 9 administrators, ordinary users

1. Enter unlock information 2. Delete unlock information 3. System Settings 4. Unlock record information 5.Modify the unlock password	→ Press 1	1. Enter administrator 2. Enter ordinary users 3. Admission of temporary users

2-3: According to the actual needs of use, select the corresponding number keys to enter different temporary users.
Note: Password mantissa: 4-16 digits.

1. Enter unlock information 2. Delete unlock information 3. System Settings 4. Unlock record information 5.Modify the unlock password	→ Press 3	1. Enter administrator 2. Enter ordinary users 3. Admission of temporary users

1、Matters needing attention

1) After the new lock is installed, the recovery initialization operation should be performed to clear the fingerprints entered during the installation and debugging;

2) The handle is a key part of opening and closing the door, and its flexibility directly affects the use of the door lock, so please do not hang objects on the handle;

3) When collecting fingerprints, the strength of the fingers should be moderate, and please do not apply strong pressure to prevent the fingerprint collection head from being scratched;

4) If the fingerprint/card/password are entered incorrectly 5 times in total, the alarm will be issued, the device will sound an alarm, and the door lock will not be able to be used within 90 seconds

5)Initialization operation: Use the card pin, press the small hole in the middle of the unlock/close button on the rear panel, hold for 5-8 seconds, the voice prompt "Initialization successful" The factory engineering password is "123456" to open the door, after entering the administrator information , the engineering password "123456" will be deleted automatically.

2、Product Settings

2-1: Button function
【#】key is the confirmation key in the wake-up state, and it is the doorbell key in the sleep state in the wake-up;
【*】key is clear key/return key. Enter the password and press and hold to clear the input data;
【2】key is the option to turn up;
【8】key is the scroll down option;

1. Enter administrator 2. Enter ordinary users 3. Admission of temporary users	→ Press	1. Enter temporary user 2. Set the unlock time 3. Enter a one-time password

2-4: Door According to the actual needs, select the corresponding number key to complete the setting.

1. Enter unlock information 2. Delete unlock information 3. System Settings 4. Unlock record information 5.Modify the unlock password	→ Press	1. Unlock mode setting (single/combined) 2. Normally open function setting (open/close) 3. Language settings 4. Unlock language setting (open/close) 5. Date and time setting 6. Restore factory settings Version Information

3、other instructions

1.Enter the wrong code 5 times in a row, the keyboard will be locked for 3 minutes, and the system will not respond to any operation for 3 minutes;
2.Password anti-peeping function: When the password is opened, enter the password as follows: XXX password XXX; you can add some irrelevant codes before and after the password, and then press # to confirm. Password must be included in what you type.
3.The system will automatically exit if there is no operation for more than 12 seconds each time.

4、technical parameters

power supply	8 AAA batteries, 4 batteries are recommended
Typical Quiescent Current	<40 microamperes (battery life can exceed one year)
Operating current	<250mA (strong drive capability)
Fingerprint or card quantity to open the door	<=300 groups
Number of passwords to open the door	<=300 groups
executive body	DC micro motor
Operating temperature	-40-70℃
Storage temperature	Celsius -65-125℃
humidity	Relative temperature 5%-95%

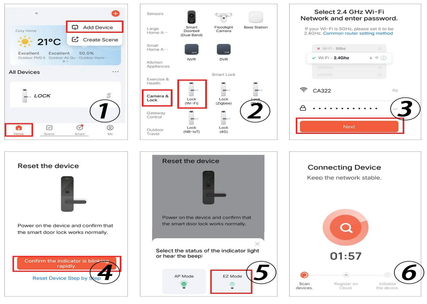

Instructions for Tuya Smart APP operation

Downloading Method

Download method 1: You can search "Tuya Smart" in App Store or Android app stores to download and install.
Download method 2: Scan the QR code below to download Doodle Smart

Connection Operations

Open the back cover, press the reset button (note that it is not a long press), hear a beep, listen to the voice instructions, enter the administrator password, and press # to confirm;

Operations on the APP

Open the mobile APP , first register an account, and then follow the steps below,
①To add a device, click "Add Device _ Camera/lock _ Smart lock (WiFi)";
②Select the name of WIFI, enter the password of WiFi, and click "Next";
③Reset WIFI in the menu of the lock plate system, and click "Confirm keyboard light flash" on the APP terminal after confirming the completion;
④Select "EZ mode";
⑤until the WiFi connection is successful. Normally, the operation can be successful in about 20 to 40 seconds.
Try to connect the WiFi connection to a place with good network environment.

APP functions

Function 1: Use the doorbell and upload information to the APP to ask for unlocking **Function 2:** Upload user unlock information logs